INTERCONNECTION REQUIREMENTS
INVERTER-BASED DISTRIBUTED GENERATION SOURCES
FOR SINGLE-PHASE CUSTOMER SERVICES

1. Purpose

These electric service requirements include information for use by the Service Provider and customers for interconnection and parallel operation of small inverter-based, distributed generation (DG) sources with the Service Provider's distribution system. The document is an application of SR-701 "GENERAL REQUIREMENTS FOR CUSTOMER INSTALLATION AND OPERATION OF DISTRIBUTED GENERATION SOURCES" along with the "DISTRIBUTED GENERATION INTERCONNECTION REQUIREMENTS (DGIR)" as filed with and approved by the Arizona Corporation Commission (ACC). The requirements presented are to ensure the safety of both utility and customer personnel and property.

2. Applicability

This document applies to all distributed generation sources, single-phase, inverter-based, capable of parallel operation with the Service Provider's distribution system. It pertains only to interconnection with single-phase, 120/240V, 3-wire services. For interconnection with three-phase services, please refer to SR-703.

3. Definitions

Backfeed: To energize a section of the Service Provider's distribution system from a generation source other than the Service Provider.

Disconnect Switch: A visible open disconnect device that the customer is required to install and maintain in accordance with the requirements herein. It will completely isolate the customer's generating facility from the Service Provider grid.

Distributed Generation (DG): Any type of customer electrical generator, static inverter, or generating facility interconnected with the distribution system that either (1) has the capability of being operated in electrical parallel with the distribution system or (2) can feed a customer load that can also be fed by the distribution system.

Distributed Generation Interconnection Requirements (DGIR): Document conformed to ACC Docket No. E-00000A-99-0431 Decision No. 69674, dated June 28, 2007, that describes, procedural, administrative, and technical requirements for the interconnection of DG to the Service Provider's distribution system for the purpose of parallel operation. The DGIR document can be found at the following link: https://www.tep.com/wp-content/uploads/2016/04/dgir.pdf

Distribution System: The infrastructure constructed, maintained, and operated by the Service Provider to deliver electric service to retail customers at primary and secondary distribution voltages (13.8kV and less).

Generating Facility: All or part of the customer's electrical generator(s) and/or inverter(s) together with all protective, safety, and associated equipment necessary to produce electric power at the customer's facility.

Island: A condition in which a portion of the Service Provider's distribution system is energized solely by one or more customer generating facilities through the associated point(s) of interconnection while that portion of the Service Provider distribution system is electrically separated from the rest of the Service Provider distribution system.

Line Side (Supply Side) Interconnection: Interconnection of the customer generation output between the Service Provider revenue meter and the customer main service disconnect(s).

Load Side Interconnection: Interconnection of the customer generation output at a point on the customer-side of a main service disconnect.

3. Definitions (cont'd)

Parallel System: A generating facility that is electrically interconnected to a bus common with the Service Provider distribution system, either on a momentary or continuous basis.

Point of Interconnection: The physical location where the DG conductors are connected to the customer's service.

Service Provider: A regulated electric utility that furnishes electric power and associated metering services to retail electrical customers in its defined service area. For purposes of this document, Service Provider will connote either Tucson Electric Power Company or Unisource Energy Services.

Static Inverter: A power electronic device that converts DC power to AC by means of electronic switching. For purposes of this document, only those static inverters designed to automatically separate from the Service Provider system upon loss of utility voltage and prior to reclosing of the Service Provider feeder breaker shall be acceptable for interconnection of DG systems.

(a) String Inverter: A single static inverter designed to receive the DC output of a string of series connected solar photovoltaic panels.

(b) Micro-inverter: An inverter integral with an individual solar photovoltaic panel that performs DC to AC voltage conversion so that panel output power is an AC waveform. Individual micro-inverter panel outputs are typically routed to a combiner panel for collective output on to the point of interconnection.

4. Standards

All customer equipment shall conform to the nationally-recognized standards and recommended practices. These include, but are not limited to, the following:

(a) NFPA 70 - National Electrical Code (NEC)

(b) IEEE 1547 - Standard for Interconnecting Distributed Resources with Electric Power Systems

(c) IEEE 1547.1 - Standard for Conformance Test Procedures for Equipment Interconnecting Distributed Resources with Electric Power Systems

(d) IEEE 519 - Recommended Practices and Requirements for Harmonic Control in Electrical Power Systems

(e) ANSI C84.1- Electric Power Systems and Equipment-Voltage Ratings (60Hz)

(f) UL 1741- Inverters, Converters, Controllers and Interconnection System Equipment for Use with Distributed Energy Resources

5. Service Provider Design Review and Approval

Prior to installation of customer interconnection facilities, customer shall submit a DG interconnection application to the Service Provider for review and written approval. Application forms may be found on the Service Provider's website. Documentation to be furnished with the application may include an electrical one-line diagram, an electrical three-line diagram, site plan, and equipment elevation drawings. Following approval, customer shall not remove, alter, modify, or change the equipment specifications, including, without limitation, the plans, control and protective devices or settings, and the generating facility system design, type, size, or configuration. If the customer desires to make such changes or modifications, they must revise and resubmit plans describing the changes or modifications for approval. No such change or modification may be made without prior approval.

6. Metering Requirements

(a) General:

The customer shall provide and install a meter socket, in accordance with Service Provider requirements, to meter the generator output. This is referred to as the production or DG meter socket. Equipment should be selected from the approved material list in SR-452. (At present, for residential single-phase DG systems only, Service Provider will furnish a DG meter socket to the customer if they so request.) Service Provider will furnish and install the DG meter.

Under no circumstances shall any metering enclosure be used as a conduit or raceway for any conductors other than those phase conductors being metered and the associated grounded conductor (neutral) and grounding conductor (equipment ground). A neutral must be run from the customer service to the DG meter socket and terminated on the neutral bus for DG systems that may not require a neutral to operate. 3

No loads, technologies, or strategies not related to the customer's generating facility may divert, for any purpose, DG energy that would otherwise have been metered as DG production.

3 (b) Arrangement and Location:

The DG meter shall be located within 10 feet of the revenue meter. Variances are not granted based on convenience or preference and must be submitted in the DG application and subsequently approved prior to construction. Meter sockets shall be accessible to Service Provider personnel at all times.

(c) Meter Socket Identification:

The DG meter socket shall be labeled "Distributed Generation Meter" and shall employ signage as shown in pages 6, 8, 10, and 12 of this SR. Service Provider will furnish the required warning placard to the customer through their distributor, Border States Electric.

(d) Meter Socket Heights:

Minimum and maximum meter socket heights shall be as specified in SR-405 page 2.

(e) Equipment Protection and Grounding:

Meter sockets and all related metering enclosures and equipment shall be grounded in accordance with the NEC, any applicable local codes. In addition, Service Provider requires bonding at all box connectors as shown in wiring schematics on page 7, 9 & 11. 3

(f) Working Space:

Working space requirements for all metering equipment shall be as specified in SR-405 page 10.

7. Disconnect Switches

(a) General:

As required by the DGIR, the customer shall provide and install a DG disconnect switch to isolate all ungrounded conductors of the generating facility from the Service Provider system. The switch shall be a gang-operated load-break device with a visible air-gap in the open position. It shall be rated for the current and voltage requirements of the generating facility and shall be lockable in the open position.

For residential single-phase DG systems requesting load side interconnection only, the Service Provider will furnish a DG disconnect switch to the customer, if they so request.

Under no circumstances shall any DG disconnect switch enclosure be used as a conduit or raceway for any conductors other than the metered phase conductors, associated grounded conductor (neutral) and associated grounding conductor (equipment ground) of the DG output circuit. All phase conductors shall be terminated on appropriate terminals inside the switch enclosure.

(b) Arrangement and Location:

The DG disconnect switch and all required meter switches shall be located within 10 feet of the customer's revenue meter and installed between the revenue meter and the DG meter. Variances are not granted based on convenience or preference and must be requested in the DG application and subsequently approved prior to construction. Switch installations shall be accessible and operable to Service Provider personnel at all times.

7. **Disconnect Switches (cont'd)**

(c) Labeling:

The DG disconnect switch shall be labeled "Utility DG Disconnect" and shall employ signage as shown in pages 6, 8, 10, and 12 of this SR. Service Provider will furnish the required warning label to the customer through their distributor, Border States Electric.

2 (d) Disconnect Switch Heights:

Minimum and maximum disconnect heights shall match the requirements for meter socket heights as specified in SR-405 page 2.

(e) Equipment Protection and Grounding:

DG disconnect switch enclosures shall be grounded in accordance with the NEC, any applicable local codes. In addition, Service Provider requires bonding at all box connectors as shown in wiring schematics on page 7, 9 & 11. 2

8. **Technical Requirements**

(a) Line Side Interconnections

For line side interconnections, as are permitted by NEC, the following requirements apply:

2 (1) A line side interconnection constitutes a new service and is subject to all applicable NEC requirements and/or requirements adopted by the local code-enforcement authority.

(2) Customer is required to arrange a power-kill with Service Provider to de-energize customer equipment before performing line side interconnection work. The Service Provider will energize this service only after the facility has passed inspection by both the Service Provider Design Department and the applicable government agency. Notification from the government agency must be received by the Service Provider as described in the process for new services elsewhere in these Service Requirements.

(3) Any line side interconnection shall be made without modifications to any factory installed and/or factory listed equipment or components. Please contact Service Provider Design Department for additional guidance regarding this matter.

(4) For 200A Milbank meter sockets only, customer may install Milbank tap connectors, catalog number KA77-INT, to complete the line side interconnection inside the revenue meter base enclosure. See pages 10 and 11 for this SR for further information.

(b) Minimum Protective Requirements

(1) Inverter shall be set to detect and trip for any abnormal operating condition on the Service Provider's system.

(2) Circuit breakers, if backfed, shall be suitable for such operation.

(3) Static inverters shall be tested to UL 1741 by a Nationally Recognized Testing Laboratory (NRTL) certified by OSHA to perform the UL 1741 test standard.

(c) Distribution Transformer

(1) Customer's single-phase generator can only be connected to the Service Provider's single-phase distribution transformers.

(2) Customer generators with a combined total rating of over 10 kWAC, as measured at the service entrance, will be required to be isolated from other customers served from the same Service provider transformer. This will be accomplished by installing a separate dedicated transformer to serve only the customer with DG in excess of 10 kWAC. All work necessary to modify existing Service Provider facilities to accommodate customer-owned DG shall be done at the customer's expense.

9. Customer Operating Requirements

(a) Quality of Service:

The operation of the customer's generation facility must not reduce the quality of service of the distribution system to the other Service Provider customers. No abnormal voltages, currents, frequencies, or interruptions are permitted.

(b) De-energized Service Provider Circuit:

The customer will at no time energize a de-energized Service Provider's circuit.

(c) Inhibited Parallel Operation

(1) If the Service Provider circuit is de-energized, the inverter shall not attempt to reconnect their system until power has been restored. The inverter shall delay reconnection for parallel operation of it's generating facilities for a minimum of five minutes after the Service Provider voltage and frequency are restored to normal. Service Provider is not responsible for damage caused to the customer's facility as a result of automatic or manual reclosing of distribution feeder breakers or reclosers.

(2) The customer is not prohibited from isolating their system from the Service Provider and supplying their own premise wiring while the Service Provider's circuit is de-energized.

(d) Customer Responsibility for Damage Caused by Customer Generating Facilities:

The customer is responsible for damage caused to other customers and to the Service Provider as a result of improper operation or malfunction of their generation facilities.

(e) Service Provider:

Service Provider is not responsible for damage caused to other customers and to Service Provider's facilities as a result of improper operation or malfunction of the customer's generating facilities.

(f) Inverter that Provides backup Power:

Any inverter providing a backup power supply for utility outages must separate from the Service Provider as required by UL 1741. Inverters approved for this function include: SMA TL-22 series.

Tucson Electric Power

TEP

UniSourceEnergy SERVICES
SANTA CRUZ COUNTY

INITIATED BY	ESR COMM.
DM	9-17

REVISION NO.	ESR COMM.	EFFECTIVE DATE
1	3-18	3-18

SR-702
Pg. 6 of 12

DRAWING 1A

LOAD SIDE INTERCONNECTION LAYOUT
SINGLE-PHASE SERVICE
400A AND LESS

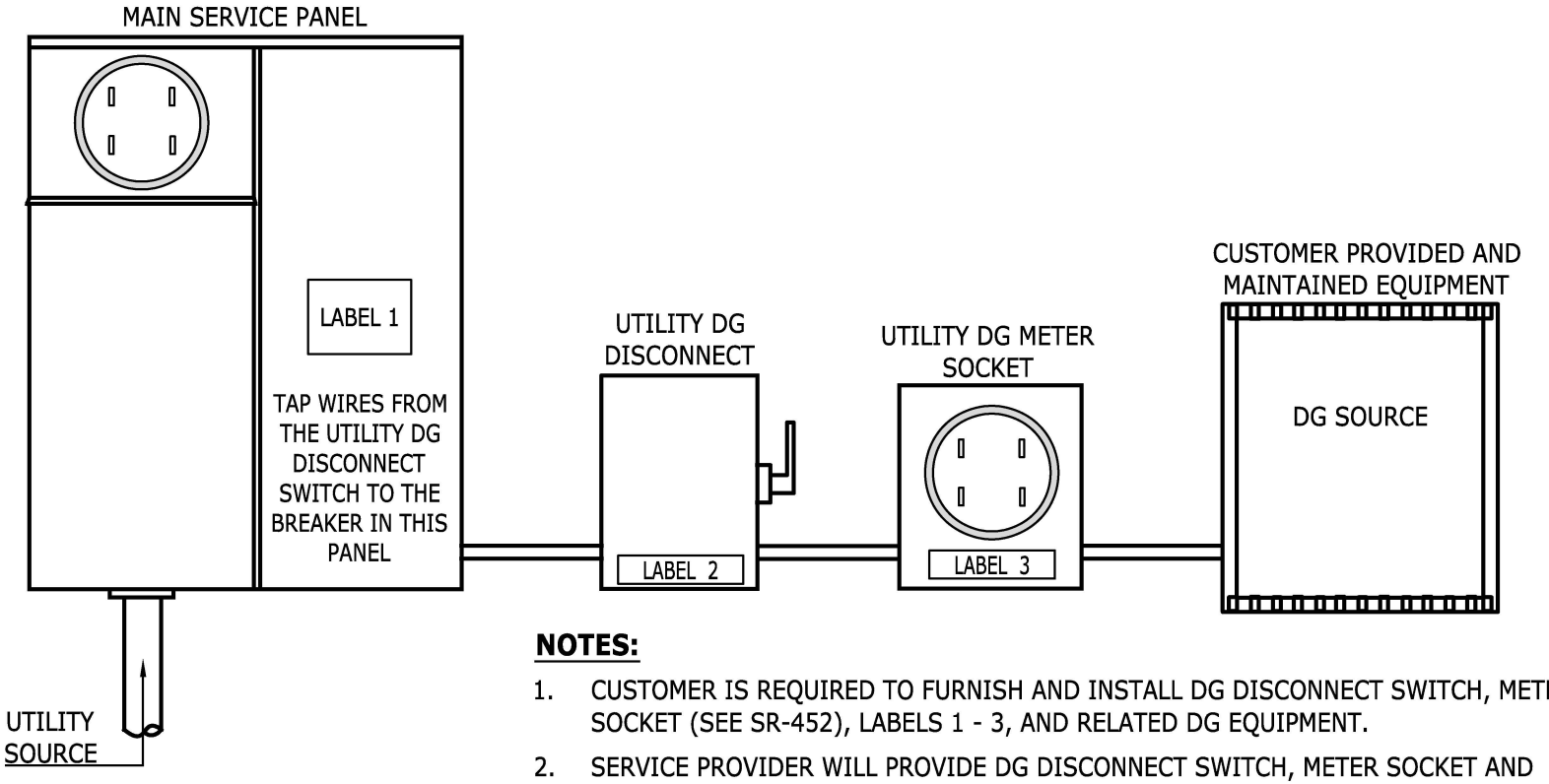

NOTES:

1. CUSTOMER IS REQUIRED TO FURNISH AND INSTALL DG DISCONNECT SWITCH, METER SOCKET (SEE SR-452), LABELS 1 - 3, AND RELATED DG EQUIPMENT.
2. SERVICE PROVIDER WILL PROVIDE DG DISCONNECT SWITCH, METER SOCKET AND LABELS ONLY FOR APPROVED SINGLE-PHASE RESIDENTIAL APPLICANTS.
3. DG METER PROVIDED AND INSTALLED BY SERVICE PROVIDER.
4. A GOVERNMENTAL AGENCY CLEARANCE IS REQUIRED FOR ALL DG INSTALLATIONS.
5. LABELS ARE AVAILABLE FOR PURCHASE AT BORDER STATES ELECTRIC 294-1414.

LABEL 1
2-15-1912

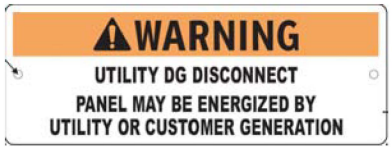

LABEL 2
2-15-1913

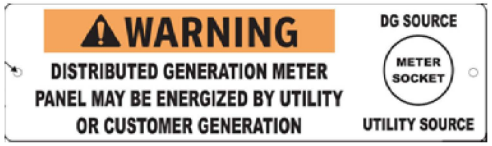

LABEL 3
2-15-1911

Tucson Electric Power

TEP

UniSourceEnergy SERVICES
SANTA CRUZ COUNTY

INITIATED BY	DM
ESR COMM.	9-17

REVISION NO.	1
ESR COMM.	3-18
EFFECTIVE DATE	3-18

SR-702 1

Pg. 7 of 12

FORMERLY SR-704, page 1

DRAWING 1B

LOAD SIDE INTERCONNECTION WIRING
SINGLE-PHASE SERVICE
400A AND LESS

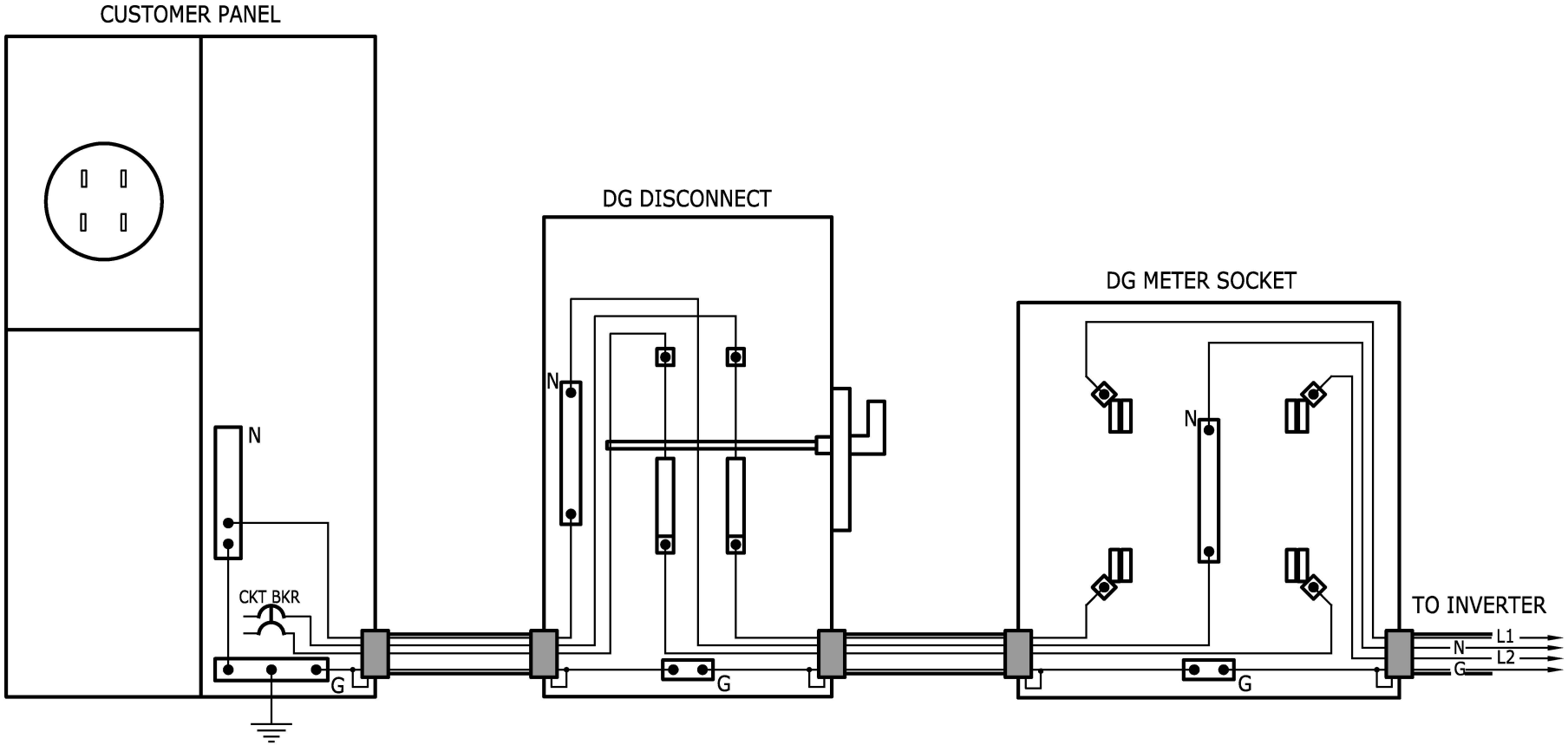

NOTE:

1. A NEUTRAL MUST BE RUN FROM CUSTOMER PANEL TO DG METER SOCKET AND TERMINATED ON THE NEUTRAL BUS FOR DG SYSTEMS THAT MAY NOT REQUIRE A NEUTRAL TO OPERATE.

LINE SIDE TAP INTERCONNECTION LAYOUT
SINGLE-PHASE SERVICE
400A AND LESS

DRAWING 2A

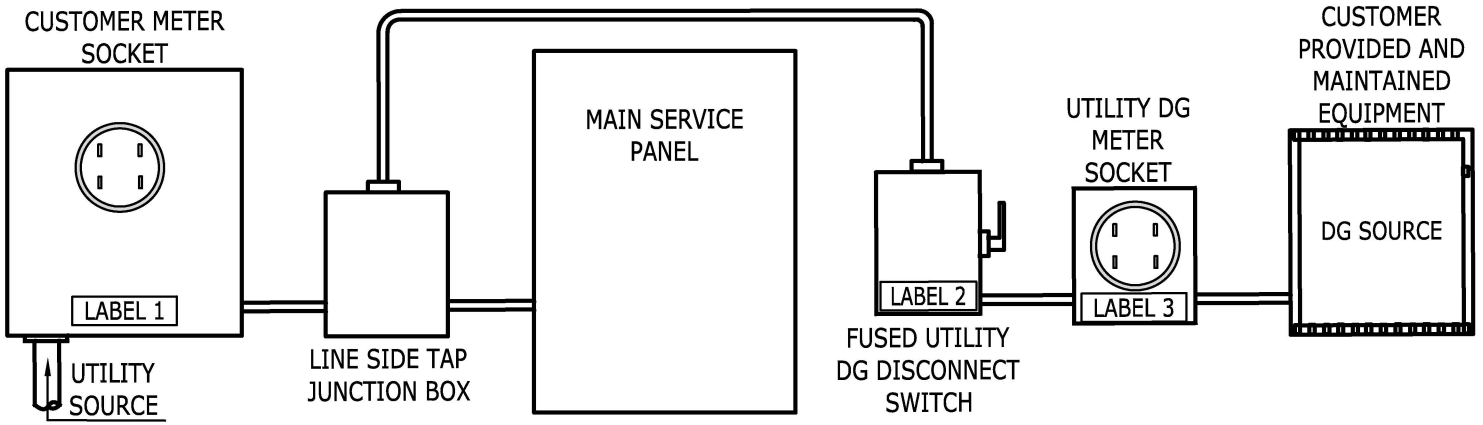

NOTES:

1. CUSTOMER IS REQUIRED TO FURNISH AND INSTALL DG DISCONNECT SWITCH, METER SOCKET (SEE SR-452), LABELS 1 - 3, AND RELATED DG EQUIPMENT.
2. SERVICE PROVIDER WILL PROVIDE METER SOCKET AND LABELS ONLY FOR APPROVED SINGLE-PHASE RESIDENTIAL APPLICANTS.
3. DG METER PROVIDED AND INSTALLED BY SERVICE PROVIDER.
4. A SERVICE PROVIDER DESIGN DEPARTMENT INSPECTION IS REQUIRED FOR APPROVAL.
5. A GOVERNMENTAL AGENCY CLEARANCE IS REQUIRED FOR ALL DG INSTALLATIONS.
6. LABELS ARE AVAILABLE FOR PURCHASE AT BORDER STATES ELECTRIC 294-1414.
7. LINE SIDE TAPS ARE NOT ALLOWED INSIDE THE CUSTOMER SERVICE PANEL. TAPS SHALL BE MADE INSIDE AN APPROVED JUNCTION BOX USING TAP (LUG) TYPE CONNECTORS.
8. JUNCTION BOX SHALL BE HOFFMAN CATALOG # A12R126 OR EQUAL. LARGER DIMENSION BOXES ARE ACCEPTABLE IF THEY MEET THE SAME REQUIREMENTS AS THE A12R126.
9. SINGLE PHASE CUSTOMER METER SOCKET MUST BE WIRED PER SR-408. IF LOCATION OF JUNCTION BOX NECESSITATES A VARIANCE TO SR-408, CUSTOMER MUST USE A MILBANK CATALOG # U4518-XL-W SOCKET OR EQUAL TO ALLOW FOR ADEQUATE SPACE FOR WIRING ROUTING.
10. CUSTOMER MAY RE-USE AN EXISTING ALL-IN-ONE PANEL AS A LOAD CENTER ONLY.

LABEL 1
2-15-1912

LABEL 2
2-15-1913

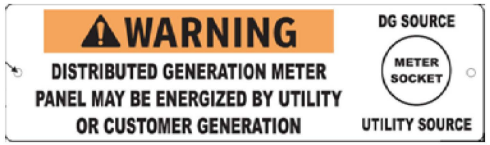

LABEL 3
2-15-1911

Tucson Electric Power
TEP
UniSourceEnergy SERVICES
SANTA CRUZ COUNTY

INITIATED BY	DM	REVISION NO.	1
ESR COMM.	9-17	ESR COMM.	3-18
		EFFECTIVE DATE	3-18

SR-702 1
Pg. 8 of 12

FORMERLY SR-702, page 7

Tucson Electric Power

TEP

UniSource Energy Services
SANTA CRUZ COUNTY

INITIATED BY	DM
ESR COMM.	9-19

REVISION NO.	2
ESR COMM.	8-18
EFFECTIVE DATE	8-18

SR-702
Pg. 9 of 12

FORMERLY SR-704, page 2

DRAWING 2B

LINE SIDE TAP INTERCONNECTION WIRING
SINGLE-PHASE SERVICE
400A AND LESS

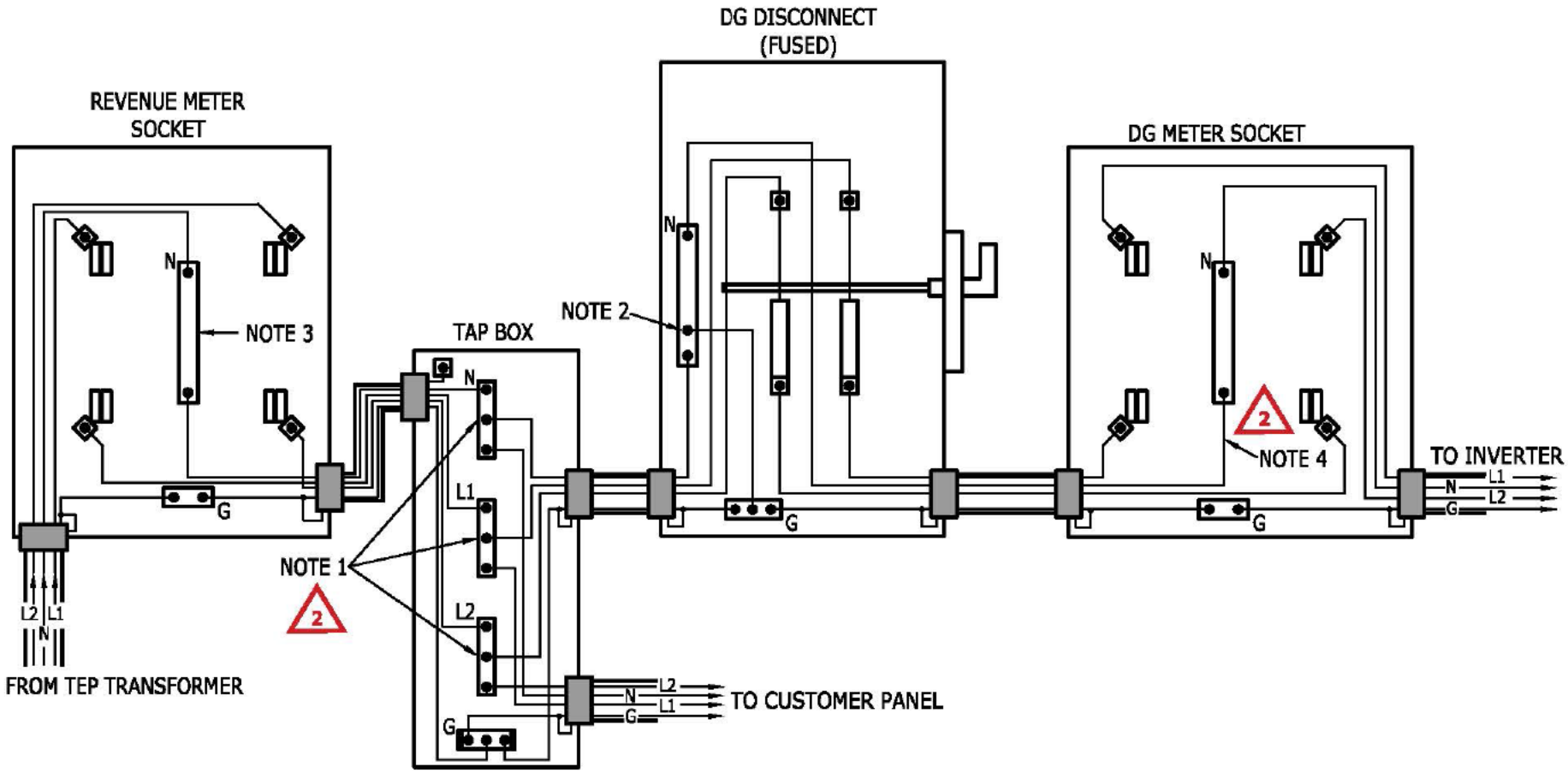

NOTES:

1. LINE SIDE TAP MUST BE MADE USING LUG-TYPE CONNECTORS.
2. FUSED DISCONNECT NEUTRAL MUST BE BONDED TO GROUND VIA BONDING JUMPER OR BONDING SCREW FOR LINE SIDE TAP.
3. NEUTRAL CONNECTOR MUST BE BONDED TO SOCKET ENCLOSURE.
4. A NEUTRAL MUST BE RUN FROM TAP BOX TO DG METER SOCKET AND TERMINATED ON THE NEUTRAL BUS FOR DG SYSTEMS THAT MAY NOT REQUIRE A NEUTRAL TO OPERATE.

DRAWING 3A 2

LINE SIDE INTERCONNECTION LAYOUT
METER SOCKET TAP CONNECTOR
SINGLE-PHASE SERVICE, 200A

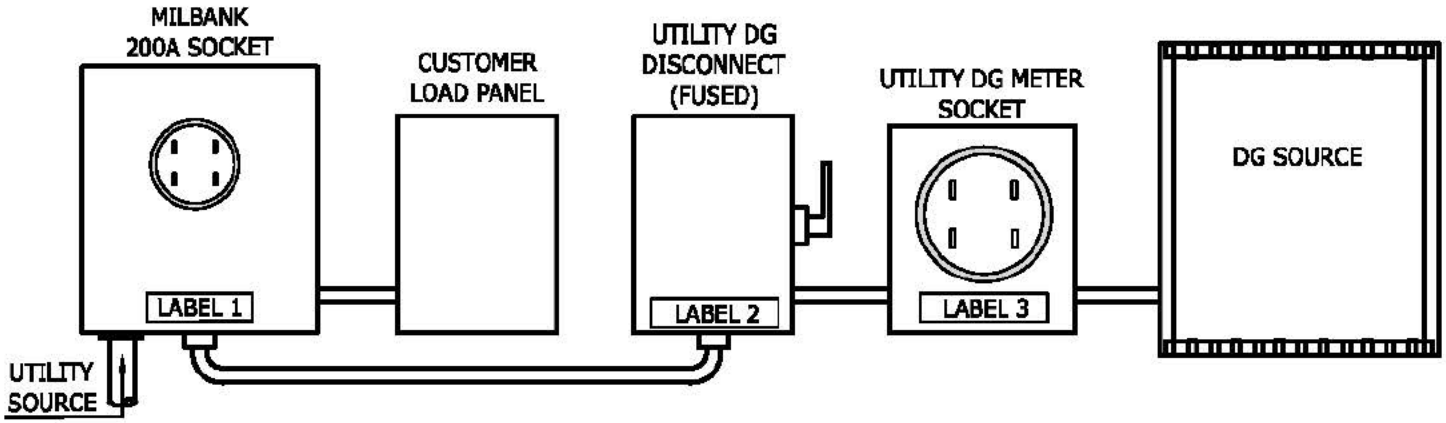

NOTES:

1. CUSTOMER IS REQUIRED TO FURNISH AND INSTALL THE DG DISCONNECT SWITCH, DG METER SOCKET (SEE SR-452), LABELS 1 - 3 AND RELATED DG EQUIPMENT.
2. DG METER PROVIDED AND INSTALLED BY SERVICE PROVIDER.
3. A GOVERNMENTAL AGENCY CLEARANCE IS REQUIRED FOR ALL DG INSTALLATIONS.
4. LABELS ARE AVAILABLE FOR PURCHASE AT BORDER STATES ELECTRIC 294-1414.

LABEL 1
2-15-1912

LABEL 2
2-15-1913

LABEL 3
2-15-1911

TEP Tucson Electric Power	UniSourceEnergy SERVICES SANTA CRUZ COUNTY	INITIATED BY	DM
		ESR COMM.	9-17
		REVISION NO.	2
		ESR COMM.	8-18
		EFFECTIVE DATE	8-18

DRAWING 3B 1

CUSTOMER OWNED DG
LINE SIDE TAP INTERCONNECTION WIRING
(DUAL LUG TAP CONNECTORS)

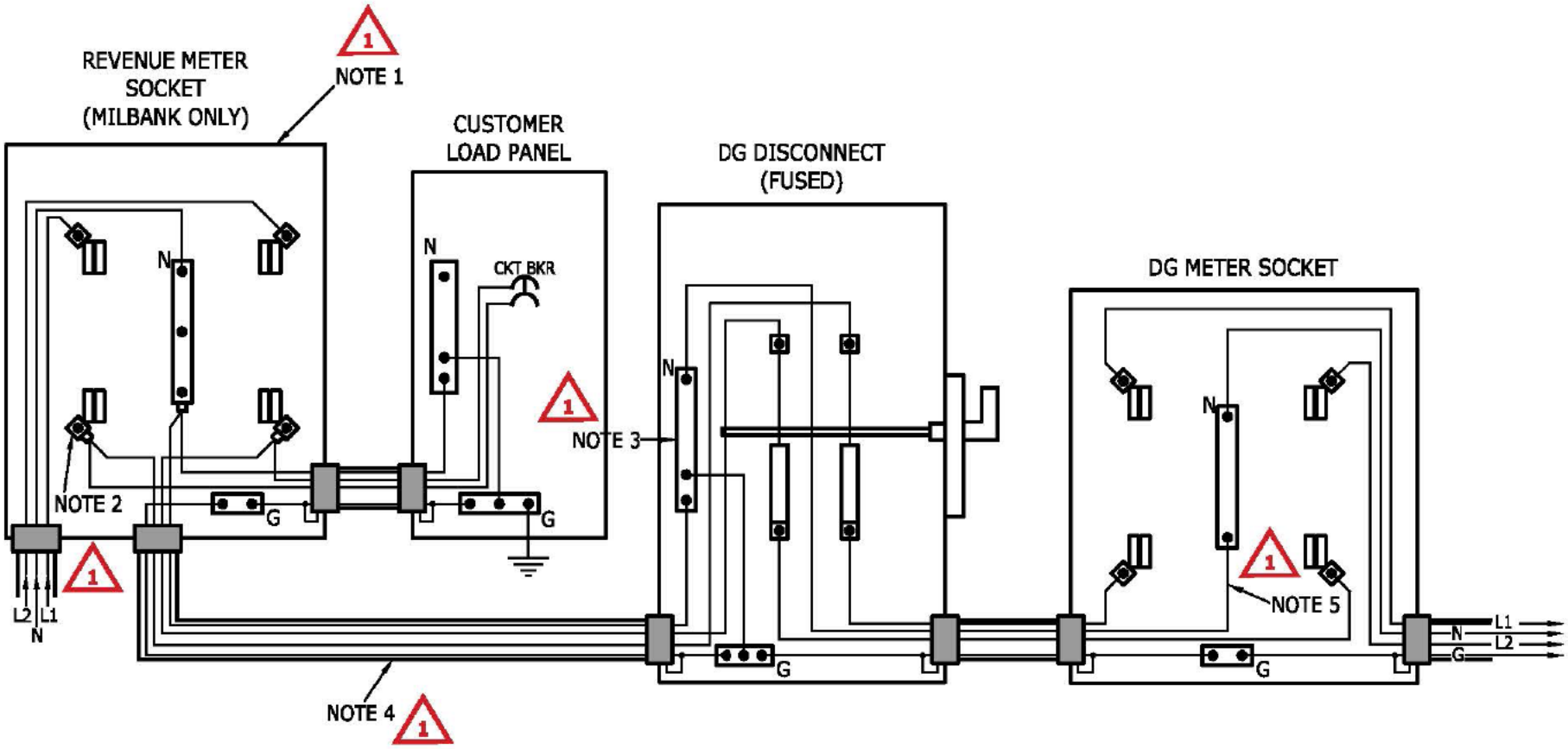

NOTES:

1. METER SOCKET MUST BE MILBANK, CATALOG No. U4518-XL-W.
2. TAP CONNECTORS MUST BE MILBANK, CATALOG No. K4977-INT.
3. 1 FUSED DISCONNECT NEUTRAL MUST BE BONDED TO GROUND VIA BONDING JUMPER OR BONDING SCREW FOR LINE SIDE TAP.
4. LABEL CONDUIT WITH "DG TAP CONDUCTORS".
5. A NEUTRAL MUST BE RUN FROM REVENUE METER SOCKET TO DG METER SOCKET AND TERMINATED ON THE NEUTRAL BUS FOR DG SYSTEMS THAT MAY NOT REQUIRE A NEUTRAL TO OPERATE.

TEP Tucson Electric Power / UniSourceEnergy SERVICES SANTA CRUZ COUNTY	INITIATED BY	DM	3-18
	ESR COMM.		
	REVISION NO.	1	8-18
	ESR COMM.		
	EFFECTIVE DATE	8-18	

SERVICE CONNECTION DETAIL
MULTI-METER INSTALLATIONS

DRAWING 4 1

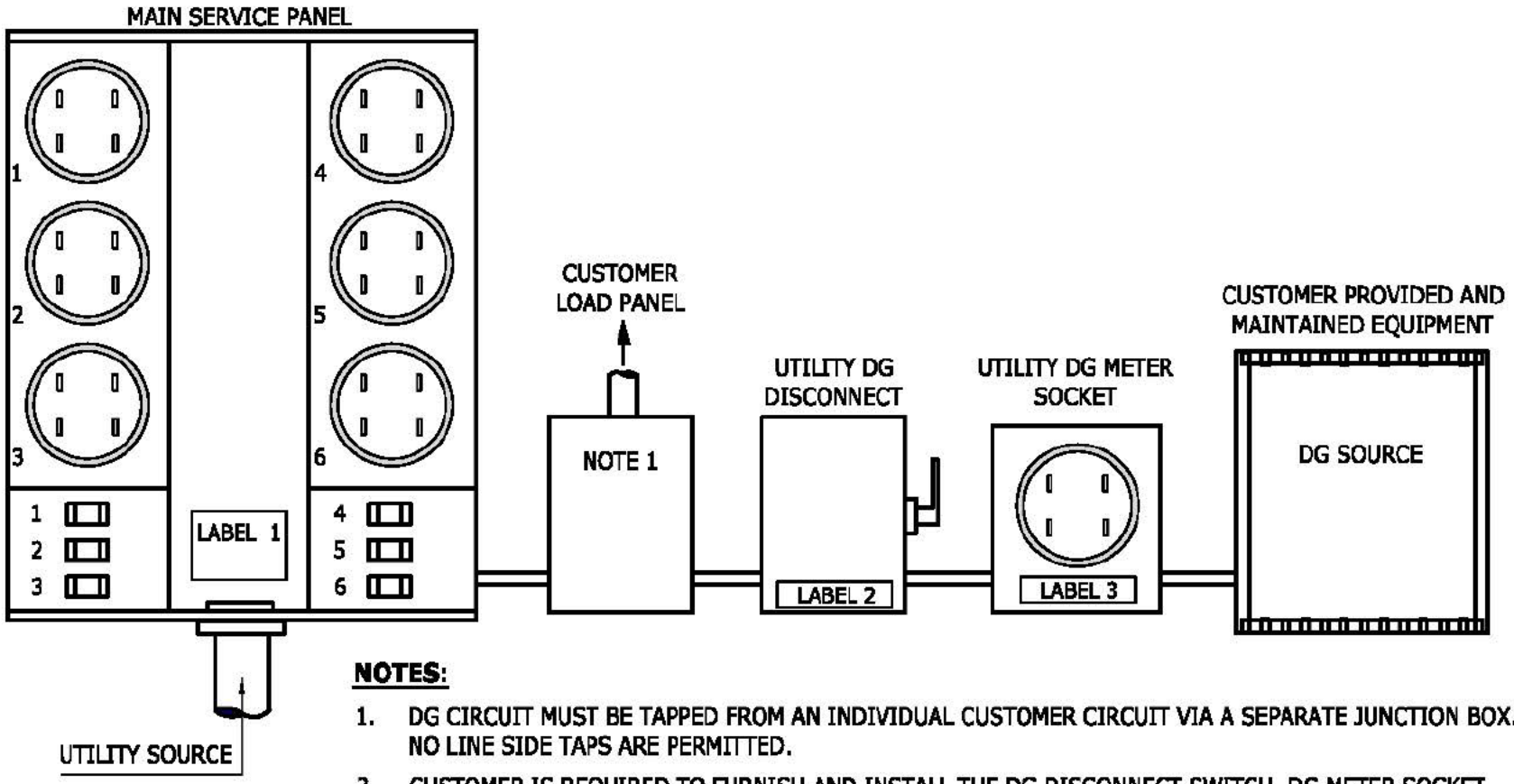

NOTES:

1. DG CIRCUIT MUST BE TAPPED FROM AN INDIVIDUAL CUSTOMER CIRCUIT VIA A SEPARATE JUNCTION BOX. NO LINE SIDE TAPS ARE PERMITTED.
2. CUSTOMER IS REQUIRED TO FURNISH AND INSTALL THE DG DISCONNECT SWITCH, DG METER SOCKET (SEE SR-452), LABELS 1 - 3 AND RELATED DG EQUIPMENT.
3. DG METER PROVIDED AND INSTALLED BY SERVICE PROVIDER.
4. A GOVERNMENTAL AGENCY CLEARANCE IS REQUIRED FOR ALL DG INSTALLATIONS.
5. LABELS ARE AVAILABLE FOR PURCHASE AT BORDER STATES ELECTRIC 294-1414.

LABEL 1
2-15-1912

LABEL 2
2-15-1913

LABEL 3
2-15-1911

Tucson Electric Power
UniSource Energy Services
SERVING SOUTHERN ARIZONA

INITIATED BY	REVISION NO.
ESR COMM.	ESR COMM.
DM	EFFECTIVE DATE
3-18	8-18
	8-18
	1

SR-702
Pg. 12 of 12

FORMERLY SR-702, page 9